ASSEMBLY TEMPLATE

PERIMETER WORKSTATION

2810K, 2810KF, 2820K, 2820KF, 2830K, 2830KF, 2840K, & 2840KF SERIES
ASSEMBLY INSTRUCTIONS

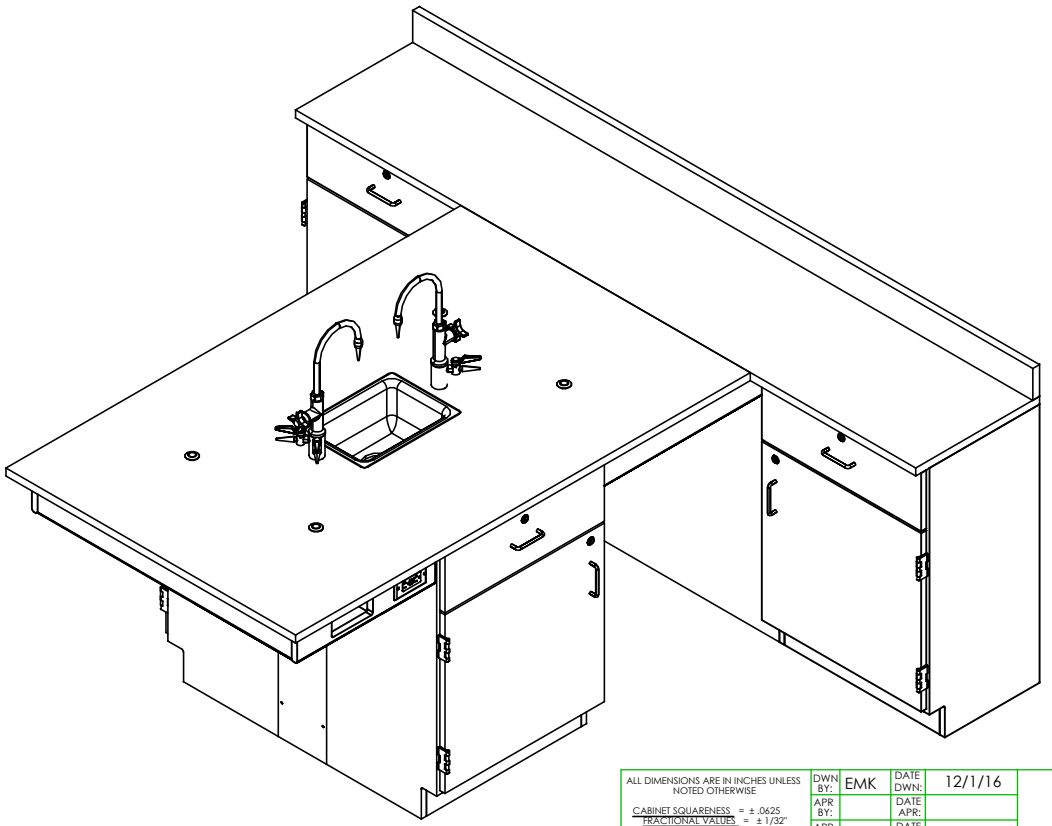

NOTE:

1. MODEL VIEWS MAY NOT REPRESENT EXACT MODEL PURCHASED

A	CREATED DRAWING	12/1/16	EMK	-
REV.	DESCRIPTION	DATE	NAME	ECN NO.
REVISION LEVEL				

ALL DIMENSIONS ARE IN INCHES UNLESS NOTED OTHERWISE	DWN BY:	EMK	DATE DWN: 12/1/16
CABINET SQUARENESS = ± .0625 FRACTIONAL VALUES = ± 1/32" - ALL VALUES ± OVERALL -	APR BY:		DATE APR:
	APR BY:		DATE APR:

CONFIDENTIAL:
ALL DESIGN RIGHTS RESERVED
THE INFORMATION, DATA, DESIGN, AND DRAWINGS EMBODIED IN THIS DOCUMENT AND ALL REPRODUCTIONS THEREOF ARE THE EXCLUSIVE PROPERTY OF DIVERSIFIED WOODCRAFTS, INC.

THESE DOCUMENTS ARE SUPPLIED WITH THE UNDERSTANDING THAT THEY WILL NOT BE DISCLOSED TO THIRD PARTIES WITHOUT WRITTEN CONSENT OF DIVERSIFIED WOODCRAFTS, INC. ANY REPRODUCTION IN PART OR WHOLE WITHOUT WRITTEN CONSENT IS SUBJECT TO LEGAL ACTION.

TITLE:
PERIMETER WORKSTATION
ASSEMBLY INSTRUCTIONS

DRAWING NUMBER:	SCALE:	SHEET:	REVISION:
PERIMETER WORKSTATION	NTS	1 OF 18	REV A

ASSEMBLY TEMPLATE

TOOLS REQUIRED

CONTACT CEMENT
SCREW DRIVER
C-CLAMPS
SHIM STOCK (IF NEEDED)

ASSEMBLY COMPONENTS

ITEMS INCLUDED	PART #	PART DESCRIPTION	QTY
TOP A	VARIES	TOP,(STYLE VARIES),1.00X42X66,BLK, (EITHER FIXTURE OR FLAT)	1
TOP B	VARIES	TOP,(STYLE VARIES),1.00X18X90,BLK	1
TOP C	VARIES	TOP,(STYLE VARIES),1.00X4.00X90,BLK	1
CABINETS	N/A	CABINET (STYLE VARIES) 24"W X 35"H X 16"D	4
REMOVABLE PANEL	N/A	0.75"THK X 42"W X 5"H	1
REMOVABLE PANEL	N/A	0.75"THK X 42"W X 30"H	1
REMOVABLE PANEL	N/A	0.75"THK X 24.25"W X 12"L	2
REMOVABLE PANEL	N/A	0.75"THK X 7"W X 35"H	2
SCREWS - REMOVABLE PANELS	100495	SCREW,#10X1- ½ PHIL TR. SMS,ZN	30
APRON ASSEMBLY	251142	APRON ASSEMBLY (FACTORY ASSEMBLED)	1
L BRACKET	100355	BRACKET,RAIL 1.25X1.25X4.25	6
SCREWS - L BRACKET	100649	SCREW,#8X ¾ PHIL TRUSS HEAD SMS	24
SILICONE	100711	SILICONE,SEALANT,CLEAR	2
RUBBER BASE MOLDING	100283	RUBBER BASE MOLDING (SOLD BY FOOT)	20
STAINLESS STEEL CORNERS	100057	CORNERS-STAINLESS STEEL,BASE	6
SCREWS - BASE	100064	SCREW,#6X½ PTH SMS SS SCREW	24
SHELF CLIPS	100027	SHELF CLIPS,PLASTIC	VARIES

NOTE:

1. TOPS ARE EITHER PHENOLIC OR EPOXY.
2. **XX** INDICATES ITEMS USED ONLY FOR THE "K" SERIES.
3. COMPONENTS VARY WITH STYLE OF PERIMETER WORKSTATION PURCHASED.

REV.	DESCRIPTION	DATE	NAME	ECN NO.
A	CREATED DRAWING	12/1/16	EMK	-

REVISION LEVEL

ALL DIMENSIONS ARE IN INCHES UNLESS NOTED OTHERWISE

CABINET SQUARENESS = ± .0625
FRACTIONAL VALUES = ± 1/32"
- ALL VALUES ± OVERALL -

DWN BY:	EMK	DATE DWN:	12/1/16
APR BY:		DATE APR:	
APR BY:		DATE APR:	

CONFIDENTIAL:
ALL DESIGN RIGHTS RESERVED
THE INFORMATION, DATA, DESIGN, AND DRAWINGS EMBODIED IN THIS DOCUMENT AND ALL REPRODUCTIONS THEREOF ARE THE EXCLUSIVE PROPERTY OF DIVERSIFIED WOODCRAFTS, INC.

THESE DOCUMENTS ARE SUPPLIED WITH THE UNDERSTANDING THAT THEY WILL NOT BE DISCLOSED TO THIRD PARTIES WITHOUT WRITTEN CONSENT OF DIVERSIFIED WOODCRAFTS, INC. ANY REPRODUCTION IN PART OR WHOLE WITHOUT WRITTEN CONSENT IS SUBJECT TO LEGAL ACTION.

TITLE:
PERIMETER WORKSTATION
TOOLS AND ASSEMBLY COMPONENTS

DRAWING NUMBER:	SCALE:	SHEET:	REVISION:
PERIMETER WORKSTATION	NTS	2 OF 18	REV A

ASSEMBLY COMPONENTS

ITEMS INCLUDED	PART #	PART DESCRIPTION	QTY
ELECTRICAL BOX	100033	ELECTRICAL BOX 3.00X2X2.5 DEEP	2
ELECTRICAL OUTLET	100034	ELE,OUT,GFI,20A 125V,BLK	2
FIXTURE - FAUCETS	100074-BKR	FIXTURE,L65-WSA-DIV(MULTI-SERVICE)	2
FIXTURE - SINK	100691	SINK,EPOXY L3,BLK	1
FIXTURE - SINK TRAP	100056	SINK TRAP,PLASTIC ADJUSTABLE	1
FIXTURE - SINK STOPPER	100112	SINK STOPPER 1 ½, BLK	1
FIXTURE - STRAINER	100055	SINK,OUTLET/STRAINER EPOXY,BLK	1
ROD SOCKETS	206505	ROD SOCKET ASSY,SOCKET,WASHER,NUT	4

NOTE:

1. TOPS ARE EITHER PHENOLIC OR EPOXY.
2. **XX** INDICATES ITEMS USED ONLY FOR THE "K" SERIES.
3. COMPONENTS VARY WITH STYLE OF PERIMETER WORKSTATION PURCHASED.

REV.	DESCRIPTION	DATE	NAME	ECN NO.
A	CREATED DRAWING	12/1/16	EMK	-
REVISION LEVEL				

ALL DIMENSIONS ARE IN INCHES UNLESS NOTED OTHERWISE

CABINET SQUARENESS = ± .0625
FRACTIONAL VALUES = ± 1/32"
- ALL VALUES ± OVERALL -

DWN BY:	EMK	DATE DWN:	12/1/16
APR BY:		DATE APR:	
APR BY:		DATE APR:	

CONFIDENTIAL:
ALL DESIGN RIGHTS RESERVED
THE INFORMATION, DATA, DESIGN, AND DRAWINGS EMBODIED IN THIS DOCUMENT AND ALL REPRODUCTIONS THEREOF ARE THE EXCLUSIVE PROPERTY OF DIVERSIFIED WOODCRAFTS, INC.

THESE DOCUMENTS ARE SUPPLIED WITH THE UNDERSTANDING THAT THEY WILL NOT BE DISCLOSED TO THIRD PARTIES WITHOUT WRITTEN CONSENT OF DIVERSIFIED WOODCRAFTS, INC. ANY REPRODUCTION IN PART OR WHOLE WITHOUT WRITTEN CONSENT IS SUBJECT TO LEGAL ACTION.

TITLE:
PERIMETER WORKSTATION
TOOLS AND ASSEMBLY COMPONENTS

DRAWING NUMBER:	SCALE:	SHEET:	REVISION:
PERIMETER WORKSTATION	NTS	3 OF 18	REV A

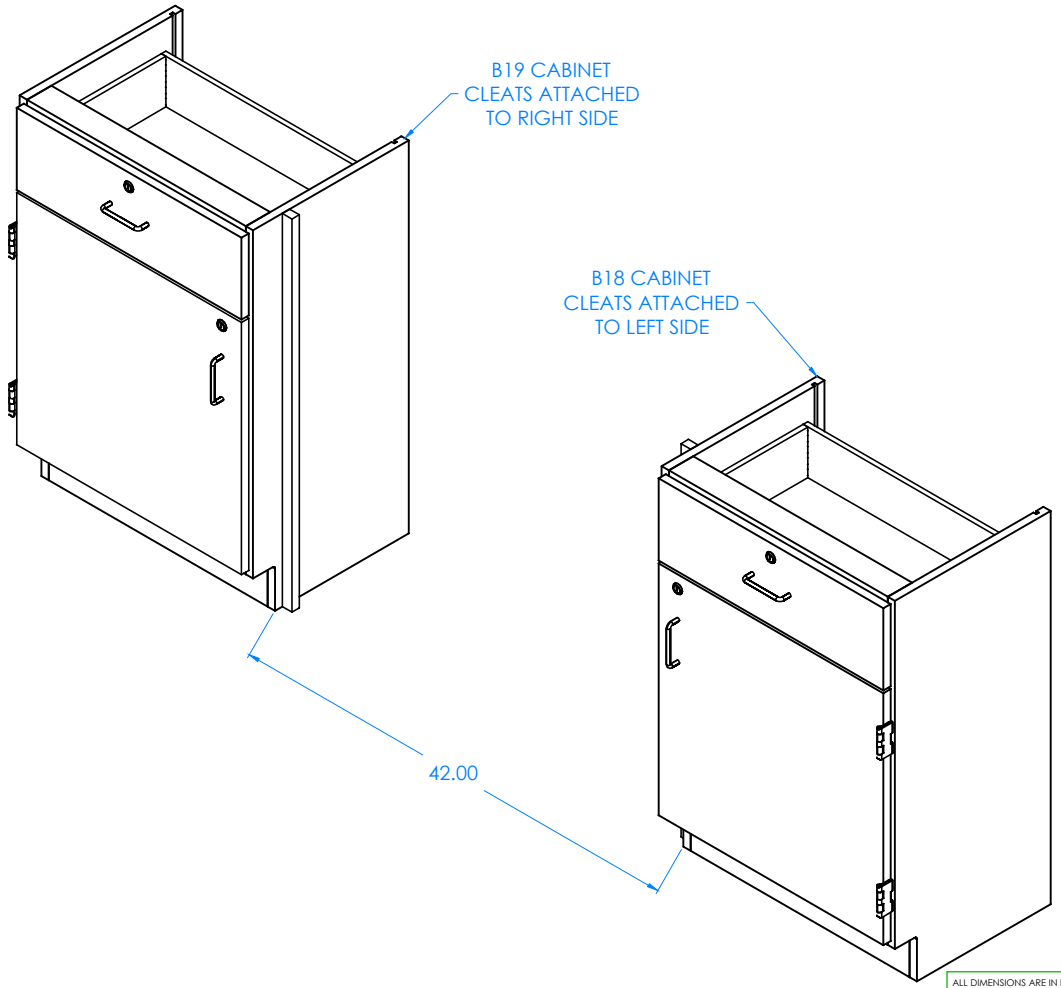

STEP 1:

- PLACE THE TWO CABINETS (CLEATS ATTACHED TO THE SIDES) AGAINST WALL.
- CLEATS SHOULD BE FACING EACH OTHER.
- LEAVE ENOUGH ROOM IN BETWEEN CABINETS FOR REMOVABLE PANELS.
- LEVEL CABINETS.
- ATTACH TO FLOOR.

NOTE:

1.

A	CREATED DRAWING	12/1/16	EMK	-
REV.	DESCRIPTION	DATE	NAME	ECN NO.
REVISION LEVEL				

ALL DIMENSIONS ARE IN INCHES UNLESS NOTED OTHERWISE CABINET SQUARENESS = ± .0625 FRACTIONAL VALUES = ± 1/32" - ALL VALUES ± OVERALL -	DWN BY:	EMK	DATE DWN: 12/1/16
	APR BY:		DATE APR:
	APR BY:		DATE APR:

CONFIDENTIAL:
ALL DESIGN RIGHTS RESERVED
THE INFORMATION, DATA, DESIGN, AND DRAWINGS EMBODIED IN THIS DOCUMENT AND ALL REPRODUCTIONS THEREOF ARE THE EXCLUSIVE PROPERTY OF DIVERSIFIED WOODCRAFTS, INC.

THESE DOCUMENTS ARE SUPPLIED WITH THE UNDERSTANDING THAT THEY WILL NOT BE DISCLOSED TO THIRD PARTIES WITHOUT WRITTEN CONSENT OF DIVERSIFIED WOODCRAFTS, INC. ANY REPRODUCTION IN PART OR WHOLE WITHOUT WRITTEN CONSENT IS SUBJECT TO LEGAL ACTION.

TITLE:
PERIMETER WORKSTATION
ASSEMBLY INSTRUCTIONS

DRAWING NUMBER:	SCALE:	SHEET:	REVISION:
PERIMETER WORKSTATION	NTS	4 OF 18	REV A

ASSEMBLY TEMPLATE

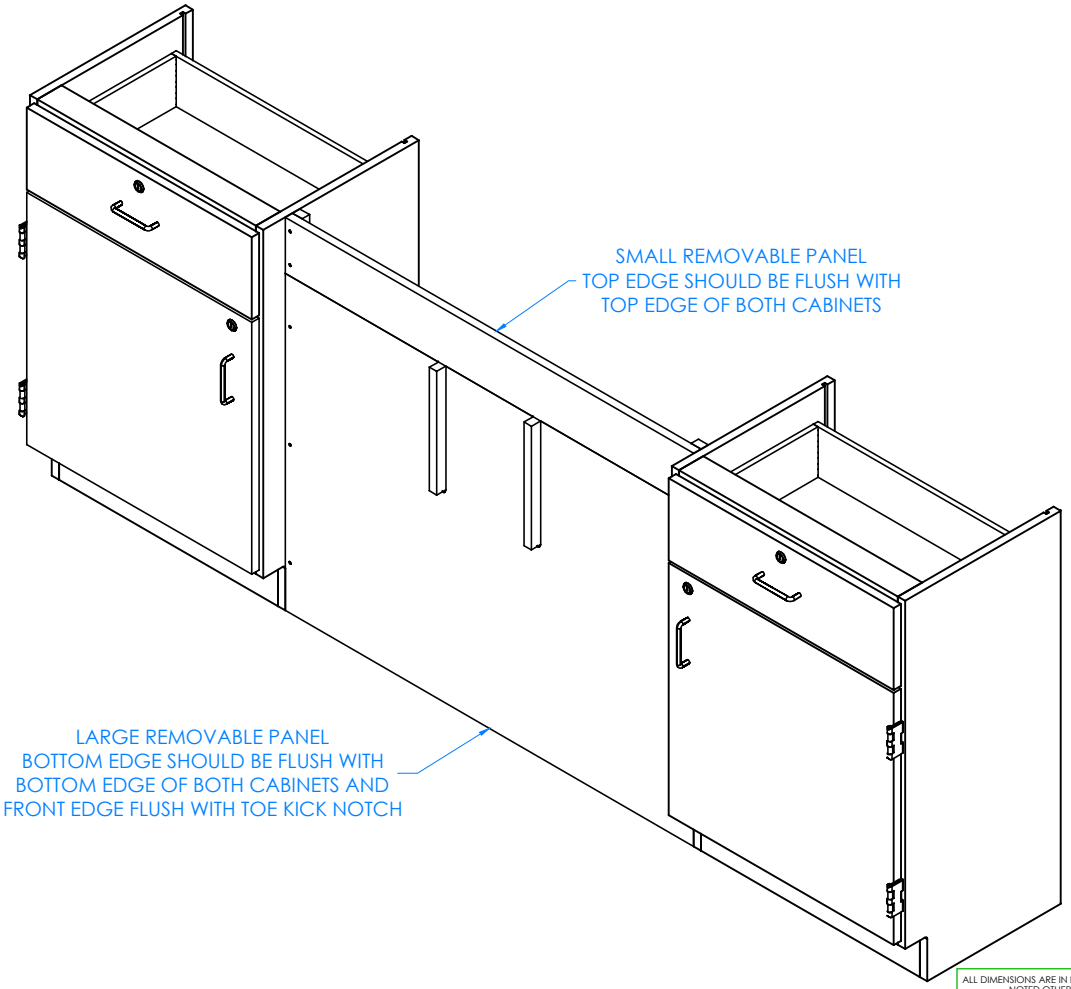

STEP 2:

- ATTACH LARGE REMOVABLE PANEL TO THE CLEATS ON THE CABINETS FIRST.
- MAKE SURE BOTTOM EDGE OF PANEL IS FLUSH WITH BOTTOM EDGE OF CABINETS AND FRONT EDGE IS FLUSH WITH TOE KICK NOTCH.
- ATTACH SMALL REMOVABLE PANEL ABOVE LARGE PANEL SECOND.
- MAKE SURE PANEL IS FLUSH WITH TOP EDGES OF CABINETS.
- PRE-DRILL HOLES IN CLEATS TO PREVENT CRACKING.

NOTE:

1.

REV.	DESCRIPTION	DATE	NAME	ECN NO.
A	CREATED DRAWING	12/1/16	EMK	-
REVISION LEVEL				

ALL DIMENSIONS ARE IN INCHES UNLESS NOTED OTHERWISE

CABINET SQUARENESS = ± .0625
FRACTIONAL VALUES = ± 1/32"
- ALL VALUES ± OVERALL -

DWN BY:	EMK	DATE DWN:	12/1/16
APR BY:		DATE APR:	
APR BY:		DATE APR:	

CONFIDENTIAL:
ALL DESIGN RIGHTS RESERVED
THE INFORMATION, DATA, DESIGN, AND DRAWINGS EMBODIED IN THIS DOCUMENT AND ALL REPRODUCTIONS THEREOF ARE THE EXCLUSIVE PROPERTY OF DIVERSIFIED WOODCRAFTS, INC.

THESE DOCUMENTS ARE SUPPLIED WITH THE UNDERSTANDING THAT THEY WILL NOT BE DISCLOSED TO THIRD PARTIES WITHOUT WRITTEN CONSENT OF DIVERSIFIED WOODCRAFTS, INC. ANY REPRODUCTION IN PART OR WHOLE WITHOUT WRITTEN CONSENT IS SUBJECT TO LEGAL ACTION.

TITLE:
PERIMETER WORKSTATION
ASSEMBLY INSTRUCTIONS

DRAWING NUMBER:	SCALE:	SHEET:	REVISION:
PERIMETER WORKSTATION	NTS	5 OF 18	REV A

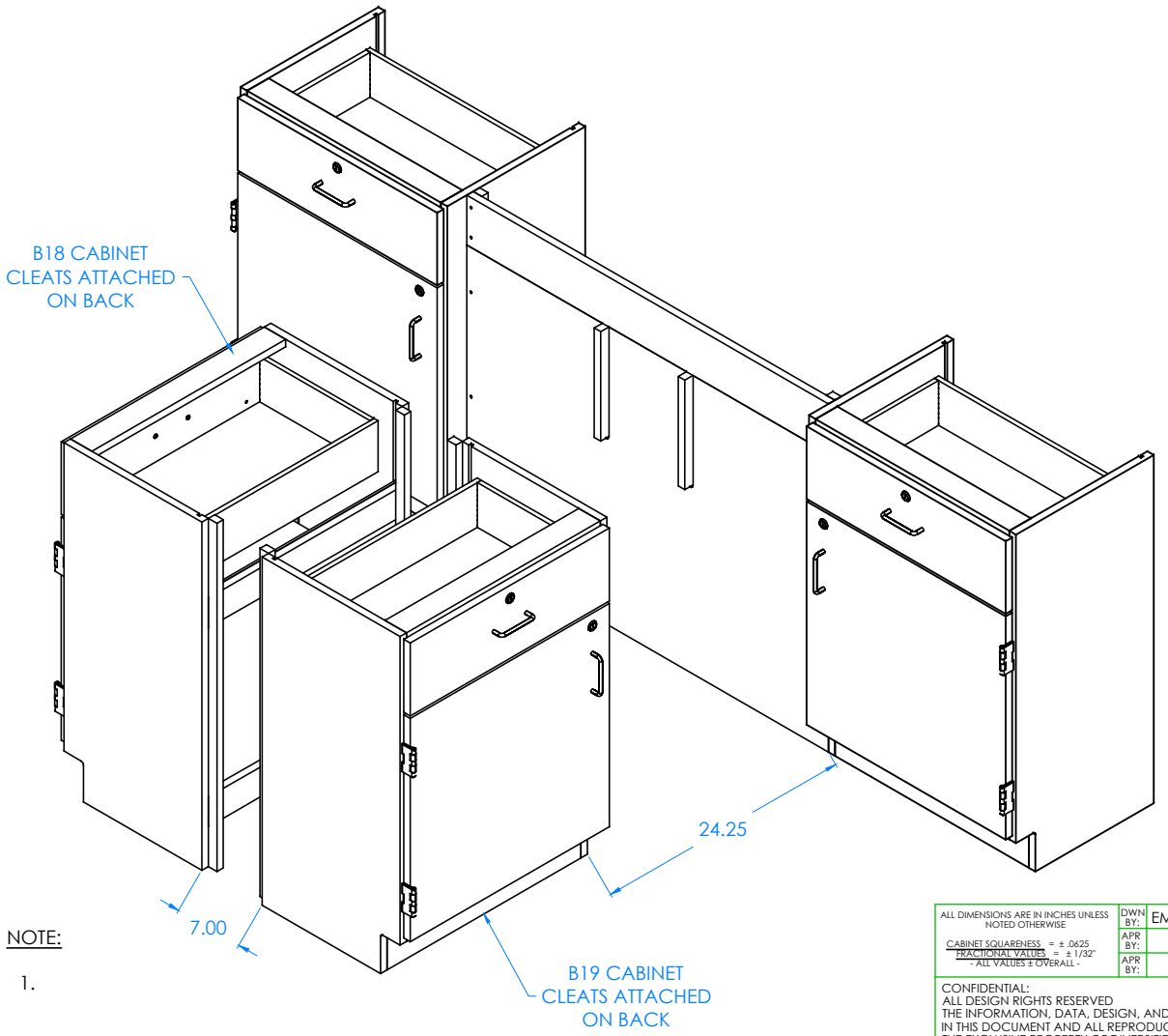

STEP 3:

- PLACE THE OTHER TWO CABINETS (WITH CLEATS ATTACHED TO BACK) CENTERED IN FRONT OF CABINETS AGAINST WALL IN CORRECT LOCATION.
- LEAVE ENOUGH ROOM IN BETWEEN CABINETS FOR REMOVABLE PANELS.
- LEVEL CABINETS.
- ANCHOR TO FLOOR.

NOTE:

1.

REV.	DESCRIPTION	DATE	NAME	ECN NO.
A	CREATED DRAWING	12/1/16	EMK	-
REVISION LEVEL				

ALL DIMENSIONS ARE IN INCHES UNLESS NOTED OTHERWISE

CABINET SQUARENESS = ± .0625
FRACTIONAL VALUES = ± 1/32"
- ALL VALUES ± OVERALL -

DWN BY:	EMK	DATE DWN:	12/1/16
APR BY:		DATE APR:	
APR BY:		DATE APR:	

CONFIDENTIAL:
ALL DESIGN RIGHTS RESERVED
THE INFORMATION, DATA, DESIGN, AND DRAWINGS EMBODIED IN THIS DOCUMENT AND ALL REPRODUCTIONS THEREOF ARE THE EXCLUSIVE PROPERTY OF DIVERSIFIED WOODCRAFTS, INC.

THESE DOCUMENTS ARE SUPPLIED WITH THE UNDERSTANDING THAT THEY WILL NOT BE DISCLOSED TO THIRD PARTIES WITHOUT WRITTEN CONSENT OF DIVERSIFIED WOODCRAFTS, INC. ANY REPRODUCTION IN PART OR WHOLE WITHOUT WRITTEN CONSENT IS SUBJECT TO LEGAL ACTION.

TITLE:
PERIMETER WORKSTATION
ASSEMBLY INSTRUCTIONS

DRAWING NUMBER:	SCALE:	SHEET:	REVISION:
PERIMETER WORKSTATION	NTS	6 OF 18	REV A

ASSEMBLY TEMPLATE

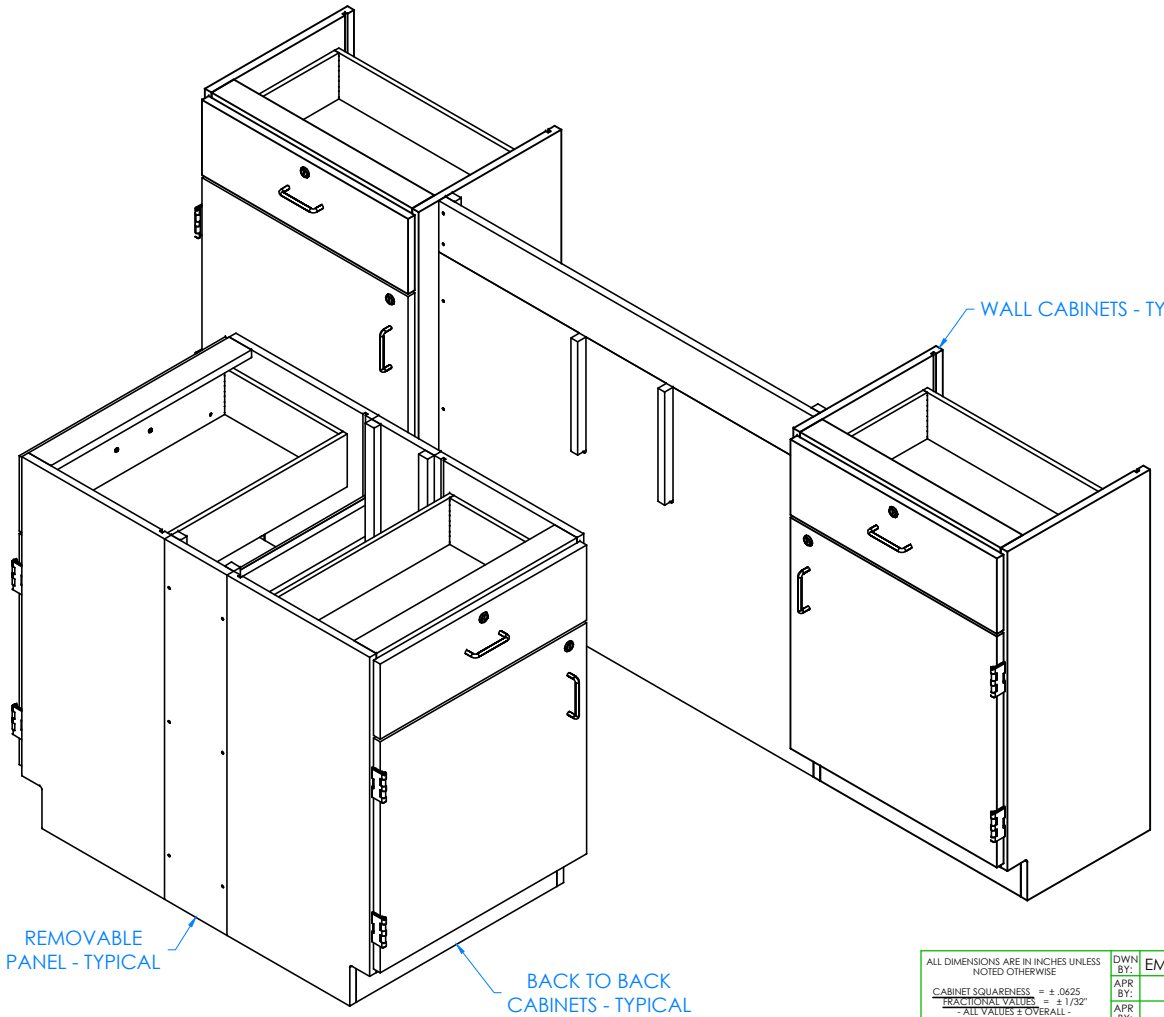

STEP 4:

- ATTACH TWO SMALL REMOVABLE PANELS IN BETWEEN THE TWO BACK TO BACK CABINETS WITH HARDWARE PROVIDED.
- PRE-DRILL HOLES IN CLEATS TO PREVENT CRACKING.

NOTE:

1.

REV.	DESCRIPTION	DATE	NAME	ECN NO.
A	CREATED DRAWING	12/1/16	EMK	-
REVISION LEVEL				

ALL DIMENSIONS ARE IN INCHES UNLESS NOTED OTHERWISE

CABINET SQUARENESS = ± .0625
FRACTIONAL VALUES = ± 1/32"
- ALL VALUES ± OVERALL -

DWN BY:	EMK	DATE DWN:	12/1/16
APR BY:		DATE APR:	
APR BY:		DATE APR:	

CONFIDENTIAL:
ALL DESIGN RIGHTS RESERVED
THE INFORMATION, DATA, DESIGN, AND DRAWINGS EMBODIED IN THIS DOCUMENT AND ALL REPRODUCTIONS THEREOF ARE THE EXCLUSIVE PROPERTY OF DIVERSIFIED WOODCRAFTS, INC.

THESE DOCUMENTS ARE SUPPLIED WITH THE UNDERSTANDING THAT THEY WILL NOT BE DISCLOSED TO THIRD PARTIES WITHOUT WRITTEN CONSENT OF DIVERSIFIED WOODCRAFTS, INC. ANY REPRODUCTION IN PART OR WHOLE WITHOUT WRITTEN CONSENT IS SUBJECT TO LEGAL ACTION.

TITLE:
PERIMETER WORKSTATION
ASSEMBLY INSTRUCTIONS

DRAWING NUMBER:	SCALE:	SHEET:	REVISION:
PERIMETER WORKSTATION	NTS	7 OF 18	REV A

STEP 5:

- WITH HELP FROM ANOTHER PERSON, POSITION APRON ASSEMBLY UP TO THE SIDE OF THE TWO BACK TO BACK CABINETS SO IT IS CENTERED CORRECTLY AND FLUSH WITH TOP OF BASE CABINETS.
- PLACE THE L-BRACKETS IN CORRECT POSITION ON APRON ASSEMBLY AND SIDE OF CABINETS (SHOULD BE FLUSH WITH TOP EDGE OF CABINETS AND FRONT AND BACK OF APRONS).
- MARK ON SIDE OF CABINETS WHERE L-BRACKETS NEED TO BE ATTACHED.
- SET APRON ASSEMBLY AND L-BRACKETS DOWN.

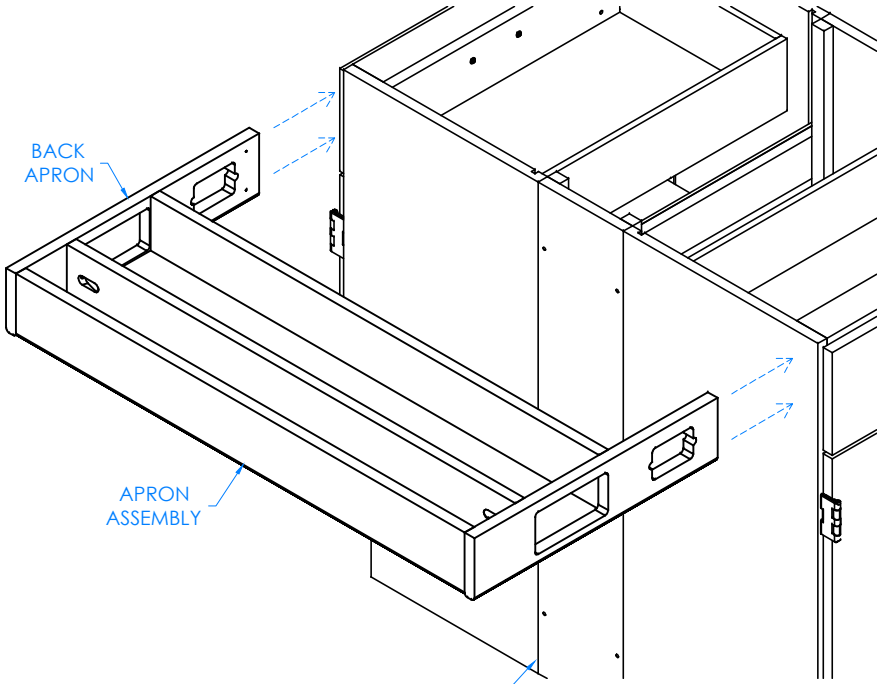

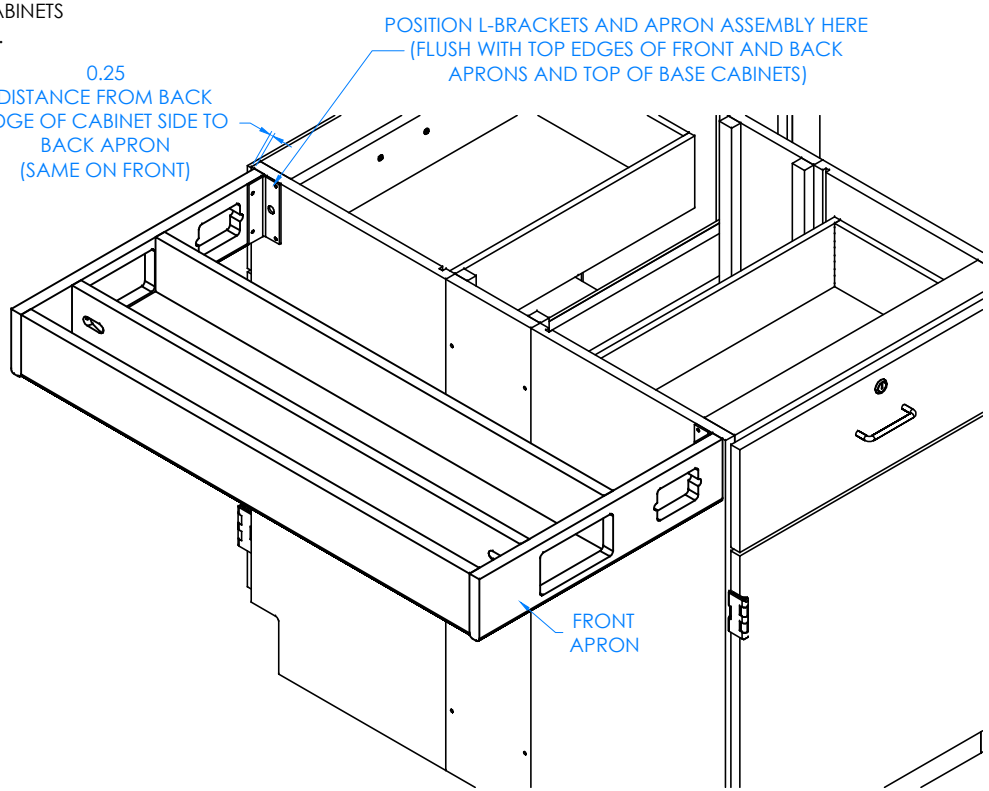

CLOSE UP OF APRON ASSEMBLY AND SIDE ON BACK TO BACK CABINETS SHOWN

NOTE:

1.

REV.	DESCRIPTION	DATE	NAME	ECN NO.
A	CREATED DRAWING	12/1/16	EMK	-
REVISION LEVEL				

ALL DIMENSIONS ARE IN INCHES UNLESS NOTED OTHERWISE

CABINET SQUARENESS = ± .0625
FRACTIONAL VALUES = ± 1/32"
- ALL VALUES ± OVERALL -

DWN BY:	EMK	DATE DWN:	12/1/16
APR BY:		DATE APR:	
APR BY:		DATE APR:	

CONFIDENTIAL:
ALL DESIGN RIGHTS RESERVED
THE INFORMATION, DATA, DESIGN, AND DRAWINGS EMBODIED IN THIS DOCUMENT AND ALL REPRODUCTIONS THEREOF ARE THE EXCLUSIVE PROPERTY OF DIVERSIFIED WOODCRAFTS, INC.

THESE DOCUMENTS ARE SUPPLIED WITH THE UNDERSTANDING THAT THEY WILL NOT BE DISCLOSED TO THIRD PARTIES WITHOUT WRITTEN CONSENT OF DIVERSIFIED WOODCRAFTS, INC. ANY REPRODUCTION IN PART OR WHOLE WITHOUT WRITTEN CONSENT IS SUBJECT TO LEGAL ACTION.

TITLE:
PERIMETER WORKSTATION
ASSEMBLY INSTRUCTIONS

DRAWING NUMBER:	SCALE:	SHEET:	REVISION:
PERIMETER WORKSTATION	NTS	8 OF 18	REV A

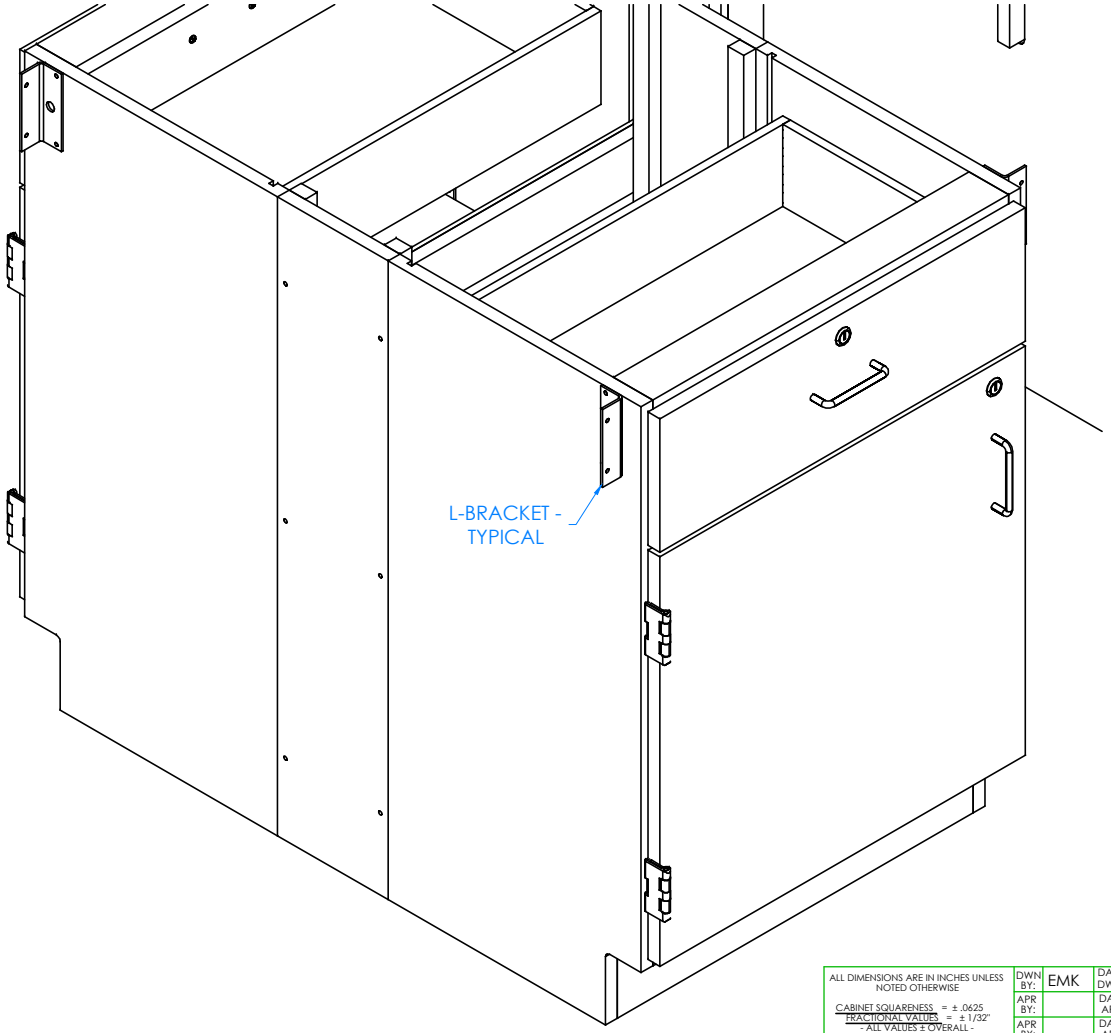

CLOSE UP OF SIDE ON BACK TO BACK CABINETS SHOWN

STEP 6:

- ATTACH L-BRACKETS TO SIDE OF CABINETS WITH HARDWARE PROVIDED.

NOTE:

1.

REV.	DESCRIPTION	DATE	NAME	ECN NO.
A	CREATED DRAWING	12/1/16	EMK	-

REVISION LEVEL

ALL DIMENSIONS ARE IN INCHES UNLESS NOTED OTHERWISE CABINET SQUARENESS = ± .0625 FRACTIONAL VALUES = ± 1/32" - ALL VALUES ± OVERALL -	DWN BY: EMK	DATE DWN: 12/1/16	
	APR BY:	DATE APR:	
	APR BY:	DATE APR:	

CONFIDENTIAL:
ALL DESIGN RIGHTS RESERVED
THE INFORMATION, DATA, DESIGN, AND DRAWINGS EMBODIED IN THIS DOCUMENT AND ALL REPRODUCTIONS THEREOF ARE THE EXCLUSIVE PROPERTY OF DIVERSIFIED WOODCRAFTS, INC.

THESE DOCUMENTS ARE SUPPLIED WITH THE UNDERSTANDING THAT THEY WILL NOT BE DISCLOSED TO THIRD PARTIES WITHOUT WRITTEN CONSENT OF DIVERSIFIED WOODCRAFTS, INC. ANY REPRODUCTION IN PART OR WHOLE WITHOUT WRITTEN CONSENT IS SUBJECT TO LEGAL ACTION.

TITLE:
PERIMETER WORKSTATION
ASSEMBLY INSTRUCTIONS

DRAWING NUMBER:	SCALE:	SHEET:	REVISION:
PERIMETER WORKSTATION	NTS	9 OF 18	REV A

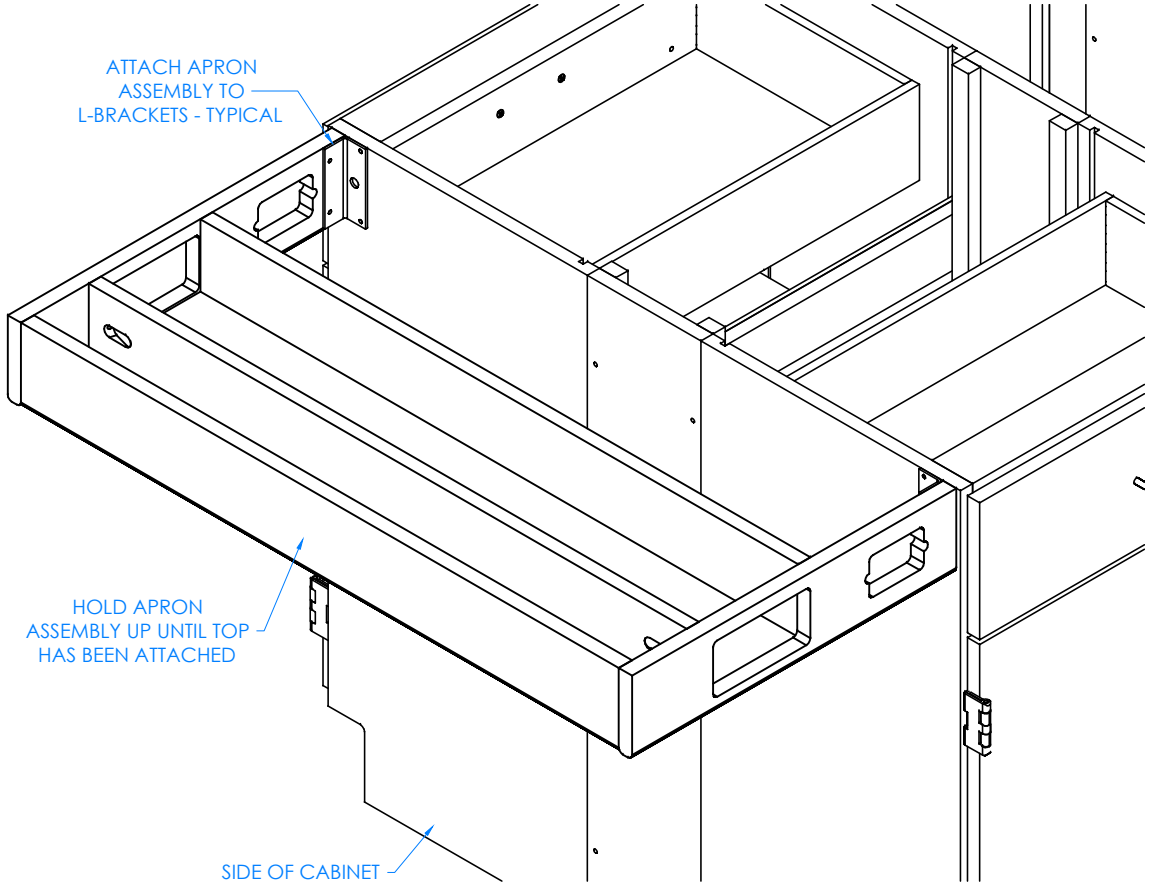

CLOSE UP OF APRON ASSEMBLY ATTACHED TO SIDE OF CABINETS SHOWN

STEP 7:

- WITH HELP FROM ANOTHER PERSON, PLACE APRON ASSEMBLY UP TO SIDE AND ATTACH TO L-BRACKETS WITH HARDWARE PROVIDED.
- SUPPORT THIS ASSEMBLY UNTIL TOP IS SECURED, IT IS NOT STRONG ENOUGH TO WITHSTAND WEIGHT UNTIL TOP IS ATTACHED.

NOTE:

1.

REV.	DESCRIPTION	DATE	NAME	ECN NO.
A	CREATED DRAWING	12/1/16	EMK	-
REVISION LEVEL				

ALL DIMENSIONS ARE IN INCHES UNLESS NOTED OTHERWISE	DWN BY: EMK	DATE DWN: 12/1/16	
CABINET SQUARENESS = ± .0625 FRACTIONAL VALUES = ± 1/32" - ALL VALUES ± OVERALL -	APR BY:	DATE APR:	
	APR BY:	DATE APR:	

CONFIDENTIAL:
ALL DESIGN RIGHTS RESERVED
THE INFORMATION, DATA, DESIGN, AND DRAWINGS EMBODIED IN THIS DOCUMENT AND ALL REPRODUCTIONS THEREOF ARE THE EXCLUSIVE PROPERTY OF DIVERSIFIED WOODCRAFTS, INC.

THESE DOCUMENTS ARE SUPPLIED WITH THE UNDERSTANDING THAT THEY WILL NOT BE DISCLOSED TO THIRD PARTIES WITHOUT WRITTEN CONSENT OF DIVERSIFIED WOODCRAFTS, INC. ANY REPRODUCTION IN PART OR WHOLE WITHOUT WRITTEN CONSENT IS SUBJECT TO LEGAL ACTION.

TITLE:
PERIMETER WORKSTATION
ASSEMBLY INSTRUCTIONS

DRAWING NUMBER:	SCALE:	SHEET:	REVISION:
PERIMETER WORKSTATION	NTS	10 OF 18	REV A

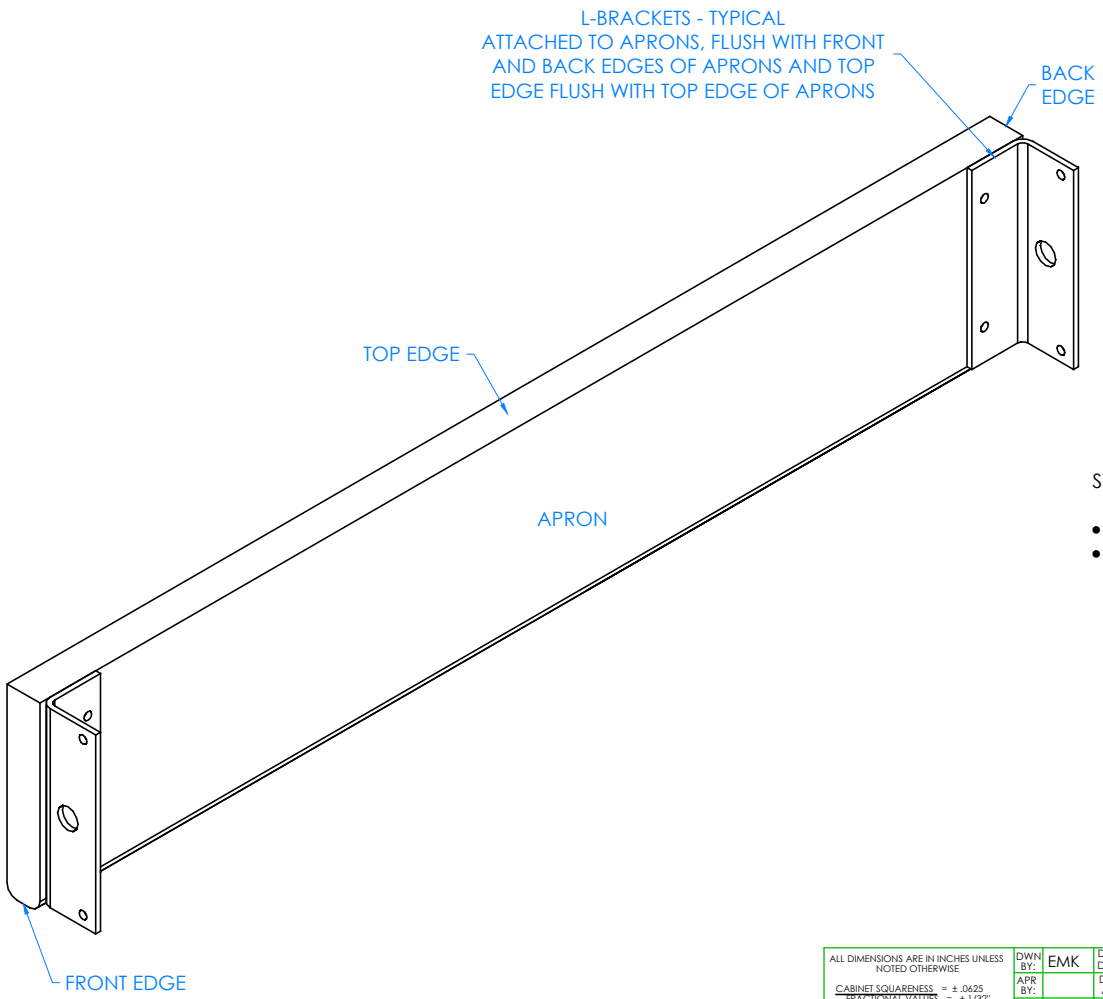

STEP 8:

- ATTACH REMAINING L-BRACKETS TO THE TWO APRONS.
- MAKE SURE BRACKETS ARE FLUSH WITH FRONT AND BACK EDGES OF APRONS AND TOP EDGE OF BRACKET IS FLUSH WITH TOP EDGE OF APRONS.

NOTE:

1.

REV.	DESCRIPTION	DATE	NAME	ECN NO.
A	CREATED DRAWING	12/1/16	EMK	-
REVISION LEVEL				

ALL DIMENSIONS ARE IN INCHES UNLESS NOTED OTHERWISE

CABINET SQUARENESS = ± .0625
FRACTIONAL VALUES = ± 1/32"
- ALL VALUES ± OVERALL -

DWN BY:	EMK	DATE DWN:	12/1/16
APR BY:		DATE APR:	
APR BY:		DATE APR:	

CONFIDENTIAL:
ALL DESIGN RIGHTS RESERVED
THE INFORMATION, DATA, DESIGN, AND DRAWINGS EMBODIED IN THIS DOCUMENT AND ALL REPRODUCTIONS THEREOF ARE THE EXCLUSIVE PROPERTY OF DIVERSIFIED WOODCRAFTS, INC.

THESE DOCUMENTS ARE SUPPLIED WITH THE UNDERSTANDING THAT THEY WILL NOT BE DISCLOSED TO THIRD PARTIES WITHOUT WRITTEN CONSENT OF DIVERSIFIED WOODCRAFTS, INC. ANY REPRODUCTION IN PART OR WHOLE WITHOUT WRITTEN CONSENT IS SUBJECT TO LEGAL ACTION.

TITLE:
PERIMETER WORKSTATION
ASSEMBLY INSTRUCTIONS

DRAWING NUMBER:	SCALE:	SHEET:	REVISION:
PERIMETER WORKSTATION	NTS	11 OF 18	REV A

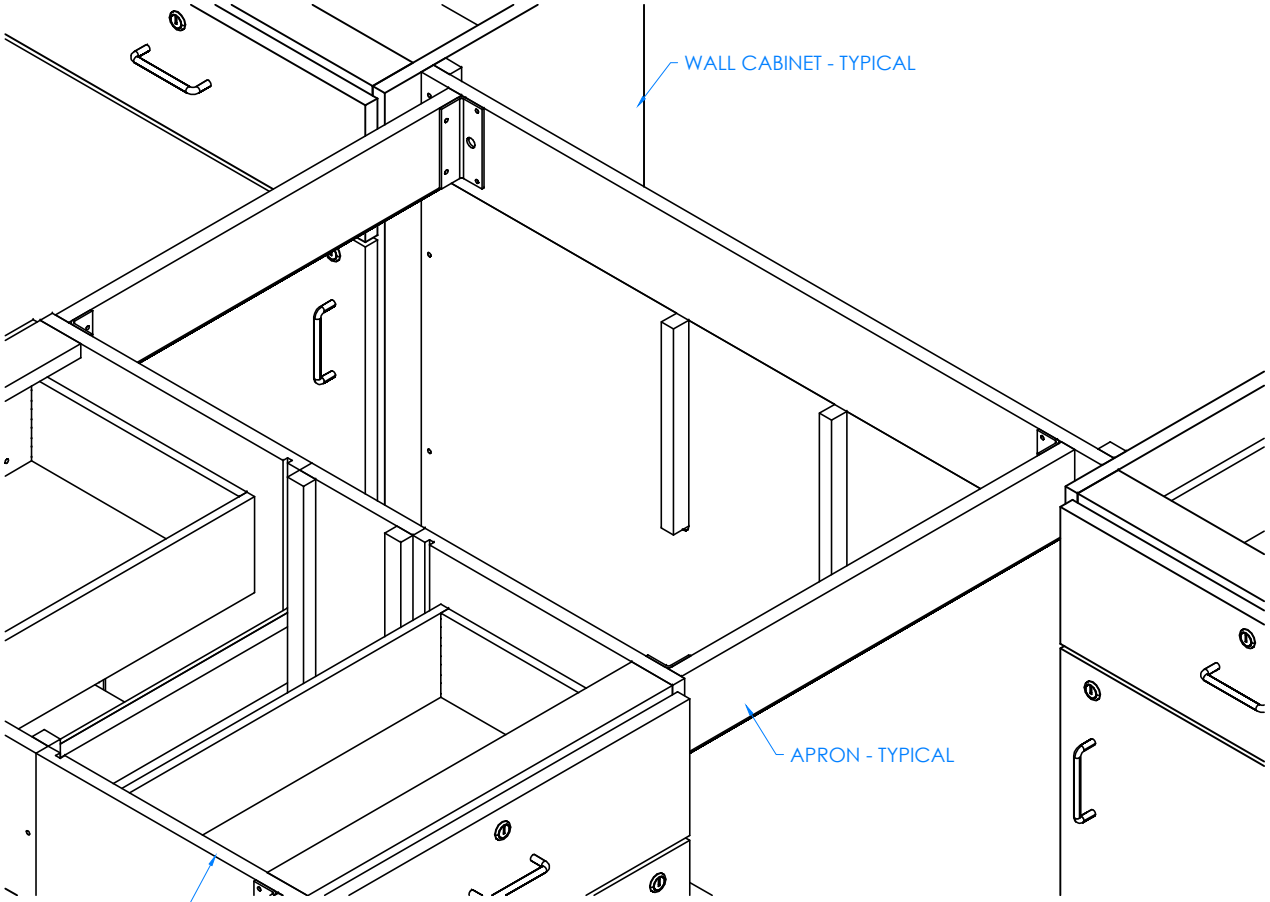

CLOSE UP OF APRONS ATTACHED IN BETWEEN BACK TO BACK CABINETS AND WALL CABINETS SHOWN

STEP 9:

- ATTACH THE TWO APRONS IN BETWEEN THE BACK TO BACK CABINETS AND THE WALL CABINETS IN DESIRED LOCATION WITH REMAINING SCREWS PROVIDED.

NOTE:

1.

REV.	DESCRIPTION	DATE	NAME	ECN NO.
A	CREATED DRAWING	12/1/16	EMK	-
REVISION LEVEL				

ALL DIMENSIONS ARE IN INCHES UNLESS NOTED OTHERWISE

CABINET SQUARENESS = ± .0625
FRACTIONAL VALUES = ± 1/32"
- ALL VALUES ± OVERALL -

DWN BY:	EMK	DATE DWN:	12/1/16
APR BY:		DATE APR:	
APR BY:		DATE APR:	

CONFIDENTIAL:
ALL DESIGN RIGHTS RESERVED
THE INFORMATION, DATA, DESIGN, AND DRAWINGS EMBODIED IN THIS DOCUMENT AND ALL REPRODUCTIONS THEREOF ARE THE EXCLUSIVE PROPERTY OF DIVERSIFIED WOODCRAFTS, INC.

THESE DOCUMENTS ARE SUPPLIED WITH THE UNDERSTANDING THAT THEY WILL NOT BE DISCLOSED TO THIRD PARTIES WITHOUT WRITTEN CONSENT OF DIVERSIFIED WOODCRAFTS, INC. ANY REPRODUCTION IN PART OR WHOLE WITHOUT WRITTEN CONSENT IS SUBJECT TO LEGAL ACTION.

TITLE:
PERIMETER WORKSTATION
ASSEMBLY INSTRUCTIONS

DRAWING NUMBER:	SCALE:	SHEET:	REVISION:
PERIMETER WORKSTATION	NTS	12 OF 18	REV A

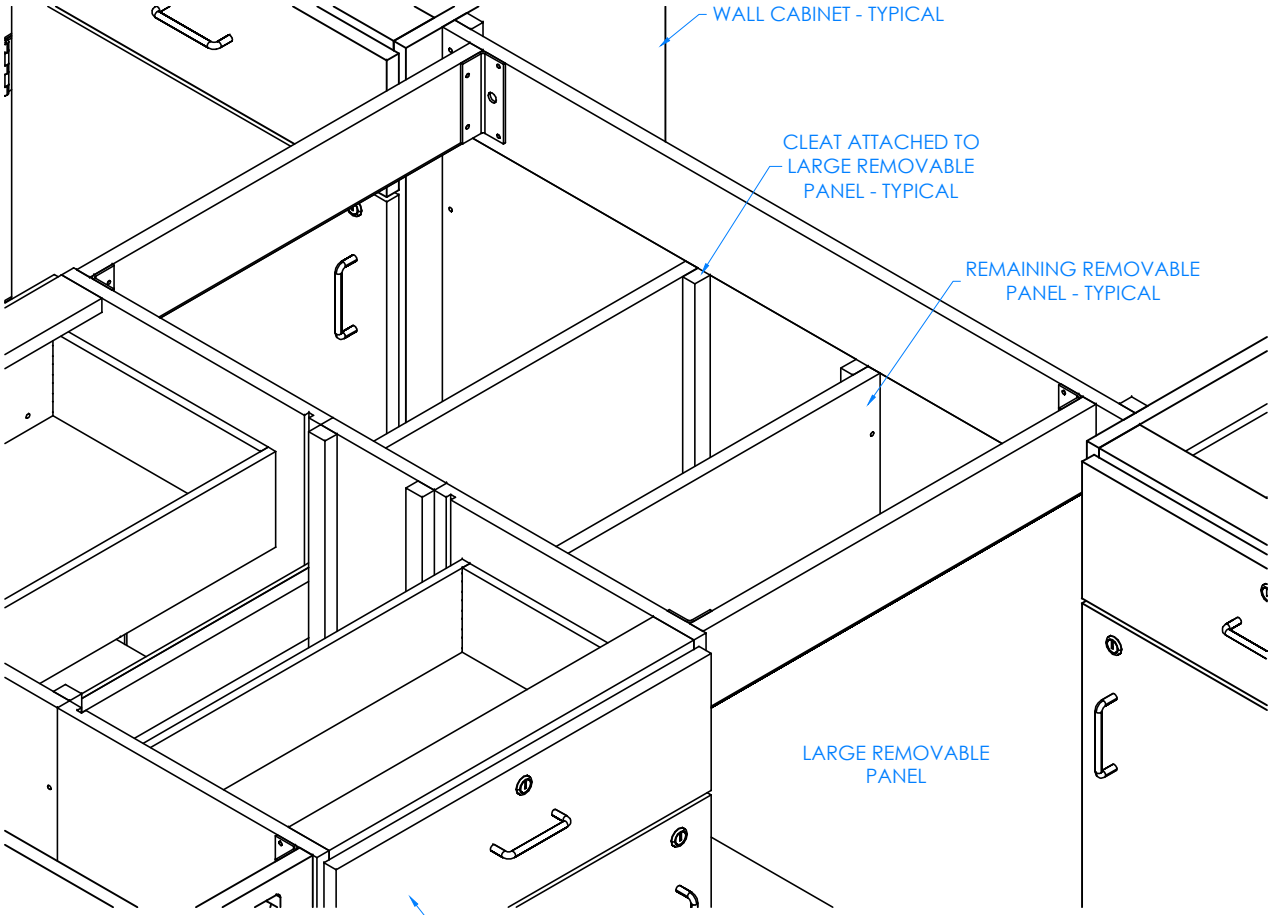

STEP 10:

- PLACE TWO REMAINING REMOVABLE PANELS TO THE CLEATS ATTACHED ON LARGE REMOVABLE PANEL AND SIDES OF THE BACK TO BACK CABINETS (NOT SHOWN).
- ATTACH WITH REMAINING SCREWS PROVIDED.
- THESE PANELS CAN BE REMOVED TO ACCESS PLUMBING AND GAS AT ANY TIME.
- PRE-DRILL HOLES IN CLEATS TO PREVENT CRACKING.

NOTE:

1.

REV.	DESCRIPTION	DATE	NAME	ECN NO.
A	CREATED DRAWING	12/1/16	EMK	-
REVISION LEVEL				

ALL DIMENSIONS ARE IN INCHES UNLESS NOTED OTHERWISE	DWN BY: EMK	DATE DWN:	12/1/16
CABINET SQUARENESS = ± .0625 FRACTIONAL VALUES = ± 1/32" - ALL VALUES ± OVERALL -	APR BY:	DATE APR:	
	APR BY:	DATE APR:	

CONFIDENTIAL:
ALL DESIGN RIGHTS RESERVED
THE INFORMATION, DATA, DESIGN, AND DRAWINGS EMBODIED IN THIS DOCUMENT AND ALL REPRODUCTIONS THEREOF ARE THE EXCLUSIVE PROPERTY OF DIVERSIFIED WOODCRAFTS, INC.

THESE DOCUMENTS ARE SUPPLIED WITH THE UNDERSTANDING THAT THEY WILL NOT BE DISCLOSED TO THIRD PARTIES WITHOUT WRITTEN CONSENT OF DIVERSIFIED WOODCRAFTS, INC. ANY REPRODUCTION IN PART OR WHOLE WITHOUT WRITTEN CONSENT IS SUBJECT TO LEGAL ACTION.

TITLE:
PERIMETER WORKSTATION
ASSEMBLY INSTRUCTIONS

DRAWING NUMBER:	SCALE:	SHEET:	REVISION:
PERIMETER WORKSTATION	NTS	13 OF 18	REV A

ASSEMBLY TEMPLATE

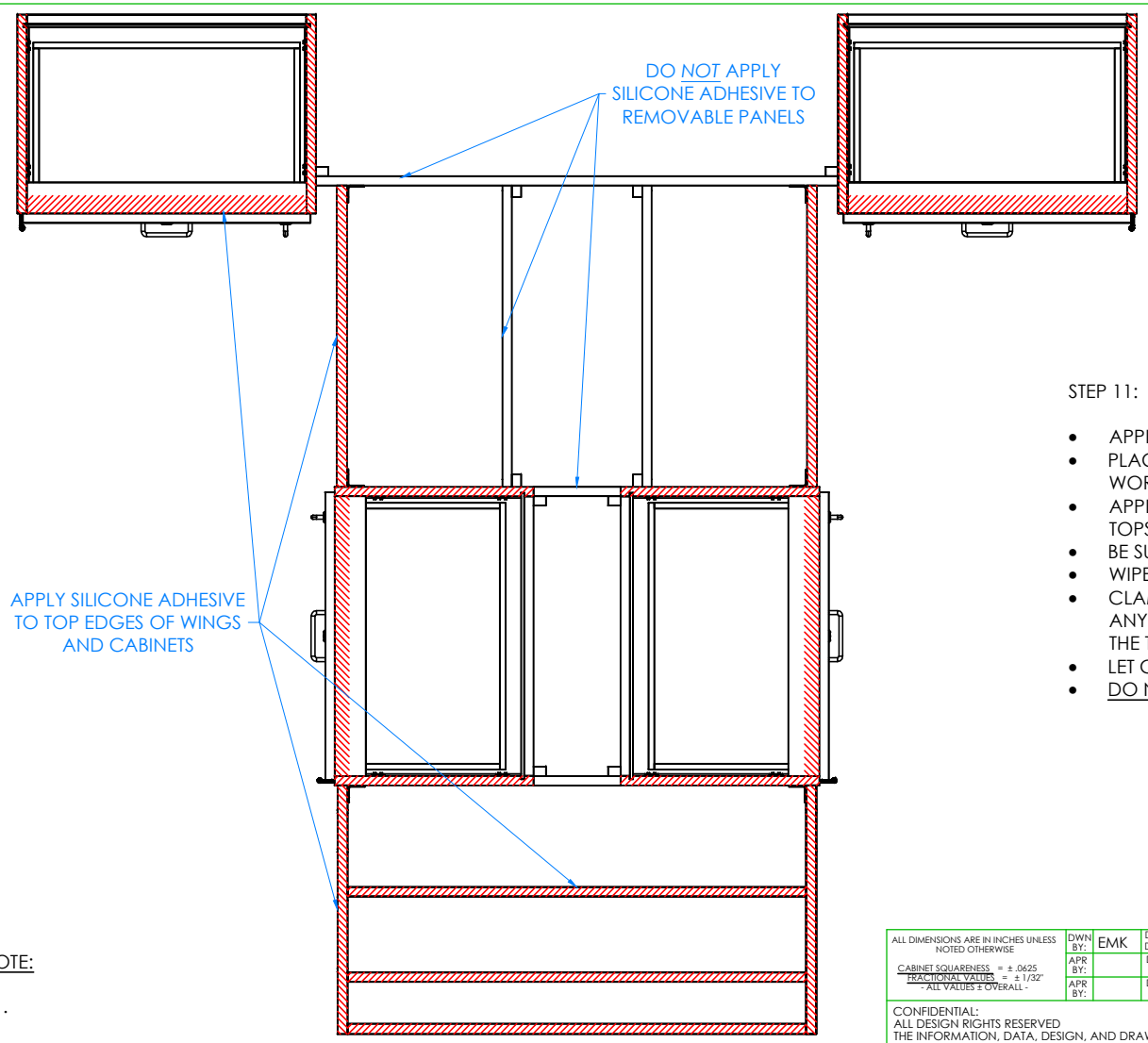

TOP VIEW OF WORKSTATION SHOWN

STEP 11:

- APPLY SILICONE ADHESIVE TO TOP EDGES OF CABINETS AND WINGS.
- PLACE TOPS ON UNIT WITH PROPER OVERHANG (CENTERED ON WORKSTATION).
- APPLY A BEAD OF ADHESIVE TO EDGES OF THE TOPS (WHERE THE TWO TOPS MEET) AND PRESS FIRMLY TO CONNECT TOPS TOGETHER.
- BE SURE TOP B IS TIGHT AGAINST WALL.
- WIPE OFF ANY EXCESS CAULK.
- CLAMP ON TOPS TO WINGS AND TOP RAILS OF CABINETS TO REMOVE ANY WARP USING SHIMS AND C-CLAMPS, IF NEEDED, WHEN ALIGNING THE TOP (DO THIS BEFORE ADHESIVE SETS UP).
- LET CURE FOR 6-12 HOURS.
- DO NOT APPLY SILICONE ADHESIVE TO REMOVABLE PANELS.

NOTE:

1.

REV.	DESCRIPTION	DATE	NAME	ECN NO.
A	CREATED DRAWING	12/1/16	EMK	-

REVISION LEVEL

ALL DIMENSIONS ARE IN INCHES UNLESS NOTED OTHERWISE

CABINET SQUARENESS = ± .0625
FRACTIONAL VALUES = ± 1/32"
- ALL VALUES ± OVERALL -

DWN BY:	EMK	DATE DWN:	12/1/16
APR BY:		DATE APR:	
APR BY:		DATE APR:	

CONFIDENTIAL:
ALL DESIGN RIGHTS RESERVED
THE INFORMATION, DATA, DESIGN, AND DRAWINGS EMBODIED IN THIS DOCUMENT AND ALL REPRODUCTIONS THEREOF ARE THE EXCLUSIVE PROPERTY OF DIVERSIFIED WOODCRAFTS, INC.

THESE DOCUMENTS ARE SUPPLIED WITH THE UNDERSTANDING THAT THEY WILL NOT BE DISCLOSED TO THIRD PARTIES WITHOUT WRITTEN CONSENT OF DIVERSIFIED WOODCRAFTS, INC. ANY REPRODUCTION IN PART OR WHOLE WITHOUT WRITTEN CONSENT IS SUBJECT TO LEGAL ACTION.

TITLE:
PERIMETER WORKSTATION
ASSEMBLY INSTRUCTIONS

DRAWING NUMBER:	SCALE:	SHEET:	REVISION:
PERIMETER WORKSTATION	NTS	14 OF 18	REV A

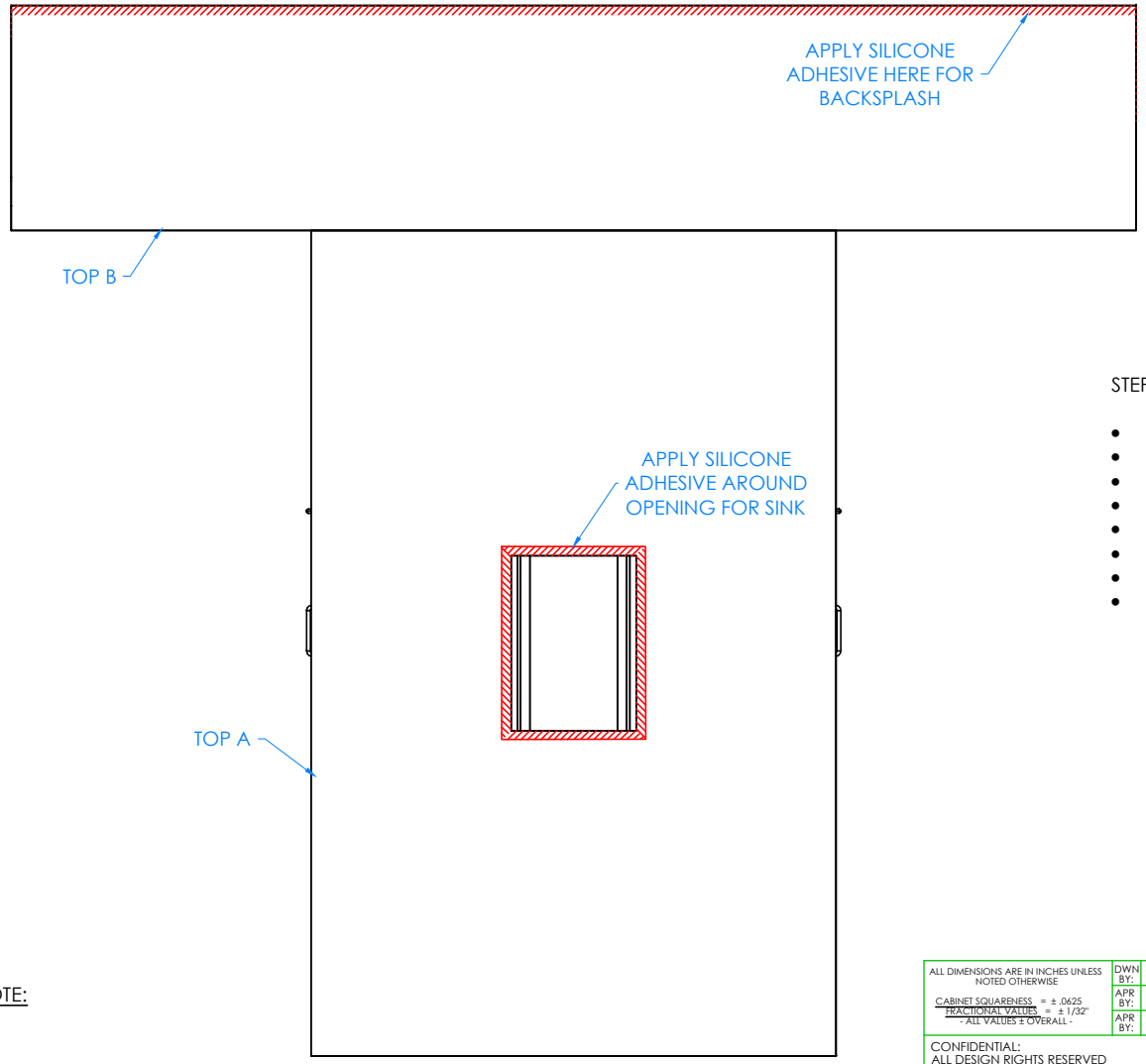

TOP VIEW OF WORKSTATION SHOWN

STEP 12:

- IF YOU DO NOT HAVE A "K" SERIES UNIT, SKIP TO STEP 13.
- APPLY SILICONE ADHESIVE TO SINK OPENING ON TOP A.
- LOWER SINK INTO OPENING.
- APPLY SILICONE ADHESIVE TO CUT EDGE OF BACKSPLASH (TOP C).
- POSITION IT ON BACK EDGE OF TOP B ALONG THE WALL.
- MAKE SURE BACKSPLASH IS TIGHT AGAINST WALL AND ON CABINET TOP.
- WIPE OFF ANY EXCESS CAULK AND ALLOW TO SET.
- LET CURE FOR 6-12 HOURS.

NOTE:

1.

REV.	DESCRIPTION	DATE	NAME	ECN NO.
A	CREATED DRAWING	12/1/16	EMK	-
REVISION LEVEL				

ALL DIMENSIONS ARE IN INCHES UNLESS NOTED OTHERWISE

CABINET SQUARENESS = ± .0625
FRACTIONAL VALUES = ± 1/32"
- ALL VALUES ± OVERALL -

DWN BY:	EMK	DATE DWN:	12/1/16
APR BY:		DATE APR:	
APR BY:		DATE APR:	

CONFIDENTIAL:
ALL DESIGN RIGHTS RESERVED
THE INFORMATION, DATA, DESIGN, AND DRAWINGS EMBODIED IN THIS DOCUMENT AND ALL REPRODUCTIONS THEREOF ARE THE EXCLUSIVE PROPERTY OF DIVERSIFIED WOODCRAFTS, INC.

THESE DOCUMENTS ARE SUPPLIED WITH THE UNDERSTANDING THAT THEY WILL NOT BE DISCLOSED TO THIRD PARTIES WITHOUT WRITTEN CONSENT OF DIVERSIFIED WOODCRAFTS, INC. ANY REPRODUCTION IN PART OR WHOLE WITHOUT WRITTEN CONSENT IS SUBJECT TO LEGAL ACTION.

TITLE:
PERIMETER WORKSTATION
ASSEMBLY INSTRUCTIONS

DRAWING NUMBER:	SCALE:	SHEET:	REVISION:
PERIMETER WORKSTATION	NTS	15 OF 18	REV A

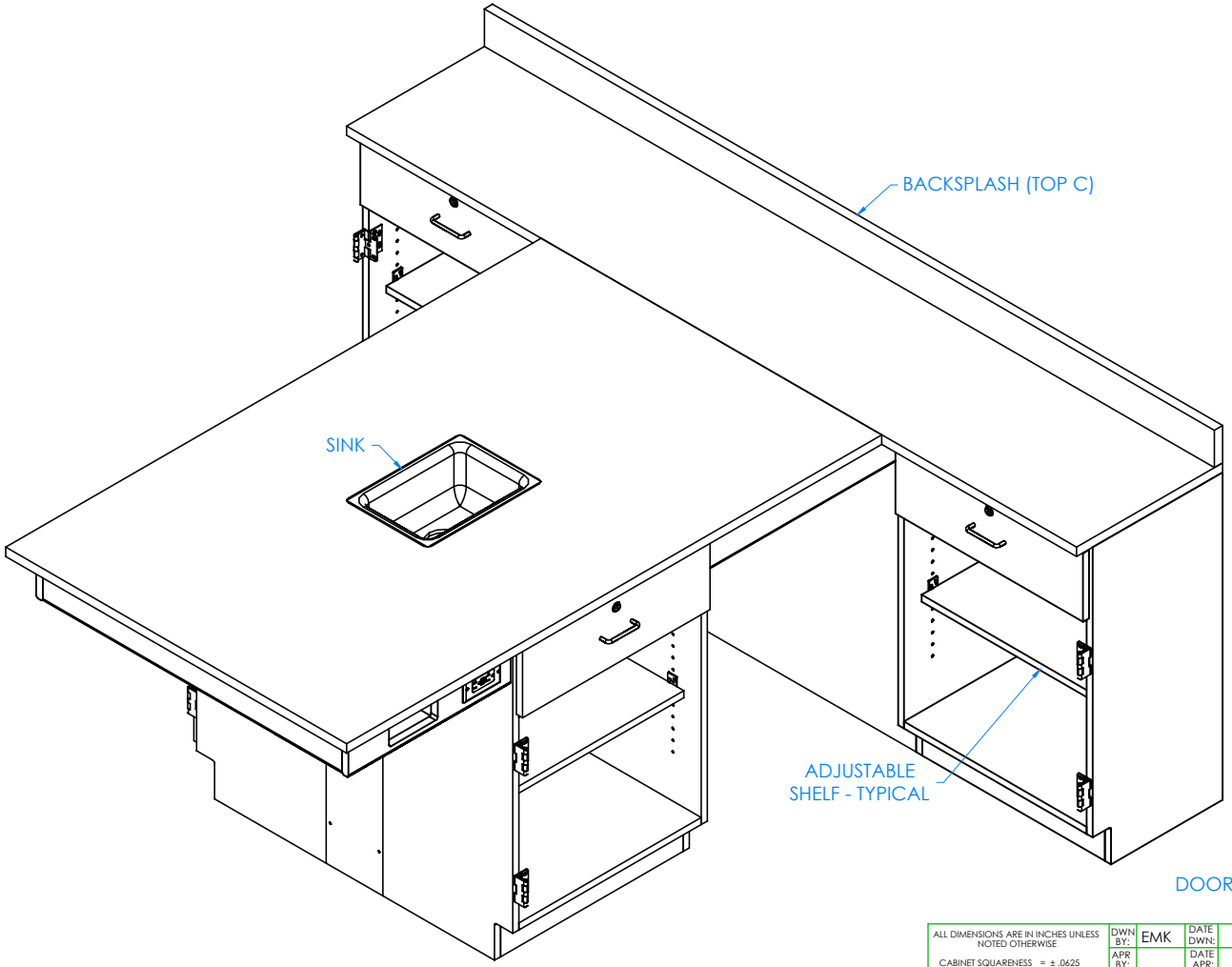

DOORS REMOVED TO SHOW CLARITY

STEP 13:

- IF YOU HAVE ADJUSTABLE SHELVES IN YOUR UNIT, INSERT SHELF CLIPS IN DESIRED LOCATION.
- PLACE SHELVES ON CLIPS, MAKING SURE THEY ARE LEVEL.

NOTE:

1. ALL WATER, ELECTRICAL, AND GAS CONNECTIONS SHOULD BE PERFORMED BY A TRAINED PROFESSIONAL PER LOCAL CODE.

REV.	DESCRIPTION	DATE	NAME	ECN NO.
A	CREATED DRAWING	12/1/16	EMK	-

REVISION LEVEL

ALL DIMENSIONS ARE IN INCHES UNLESS NOTED OTHERWISE	DWN BY:	EMK	DATE DWN: 12/1/16
CABINET SQUARENESS = ± .0625 FRACTIONAL VALUES = ± 1/32" - ALL VALUES ± OVERALL -	APR BY:		DATE APR:
	APR BY:		DATE APR:

CONFIDENTIAL:
ALL DESIGN RIGHTS RESERVED
THE INFORMATION, DATA, DESIGN, AND DRAWINGS EMBODIED IN THIS DOCUMENT AND ALL REPRODUCTIONS THEREOF ARE THE EXCLUSIVE PROPERTY OF DIVERSIFIED WOODCRAFTS, INC.

THESE DOCUMENTS ARE SUPPLIED WITH THE UNDERSTANDING THAT THEY WILL NOT BE DISCLOSED TO THIRD PARTIES WITHOUT WRITTEN CONSENT OF DIVERSIFIED WOODCRAFTS, INC. ANY REPRODUCTION IN PART OR WHOLE WITHOUT WRITTEN CONSENT IS SUBJECT TO LEGAL ACTION.

TITLE:
PERIMETER WORKSTATION
ASSEMBLY INSTRUCTIONS

DRAWING NUMBER:	SCALE:	SHEET:	REVISION:
PERIMETER WORKSTATION	NTS	16 OF 18	REV A

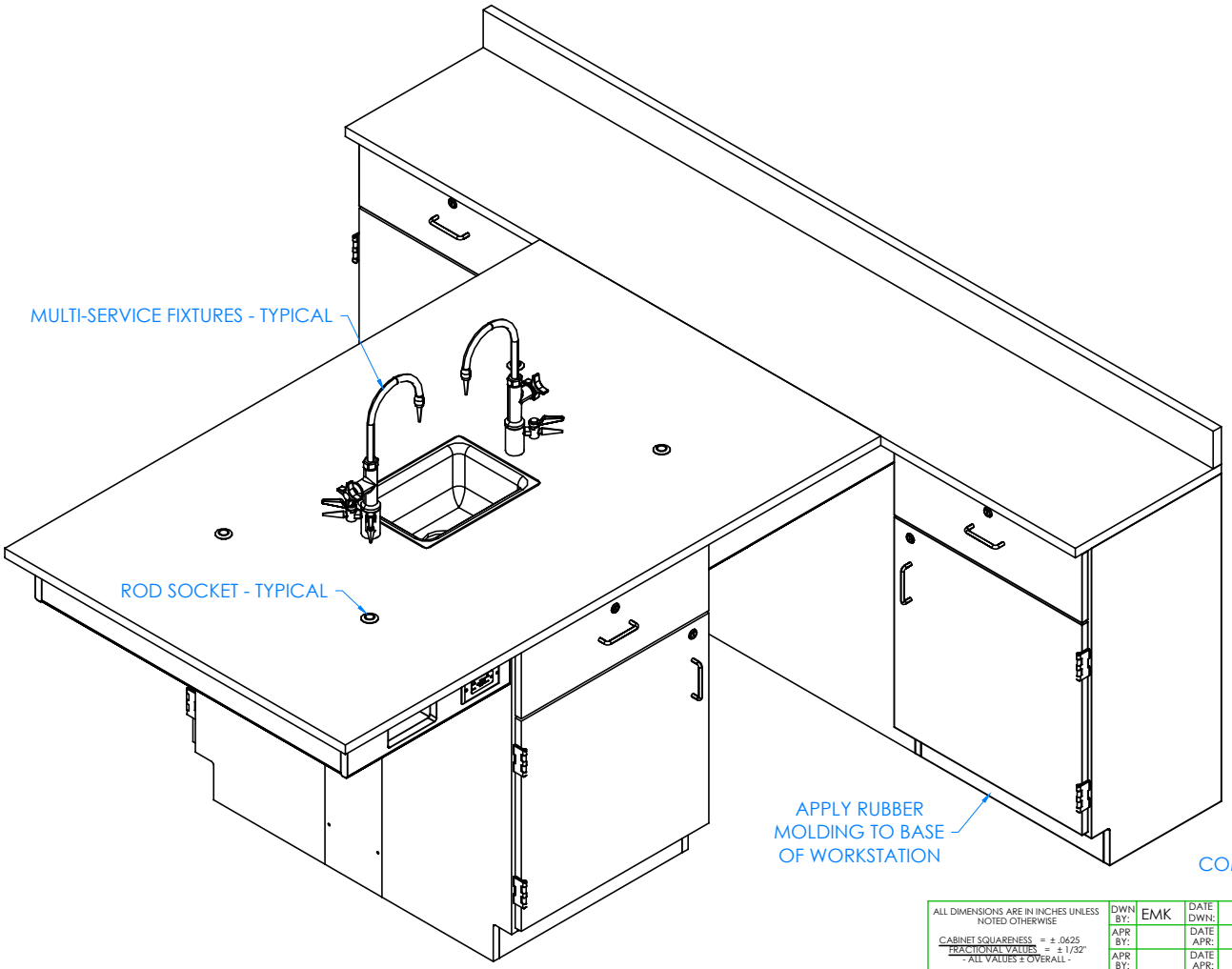

COMPLETE UNIT SHOWN

STEP 14:

- ATTACH RUBBER MOLDING TO BASE OF CABINETS USING CONTACT CEMENT.
- SCREW STAINLESS STEEL CORNER BRACKETS ON EACH CORNER OVER BASE MOLDING WITH HARDWARE PROVIDED.
- IF YOU HAVE A "K" SERIES UNIT, INSTALL MULT-SERVICE FIXTURES IN HOLES PROVIDED ON TOP.
- INSERT ROD SOCKETS INTO PRE-DRILLED HOLES IN TOP.

NOTE:

1. ALL WATER, ELECTRICAL, AND GAS CONNECTIONS SHOULD BE PERFORMED BY A TRAINED PROFESSIONAL PER LOCAL CODE.

REV.	DESCRIPTION	DATE	NAME	ECN NO.
A	CREATED DRAWING	12/1/16	EMK	-
REVISION LEVEL				

ALL DIMENSIONS ARE IN INCHES UNLESS NOTED OTHERWISE	DWN BY: EMK	DATE DWN: 12/1/16	
CABINET SQUARENESS = ± .0625 FRACTIONAL VALUES = ± 1/32" - ALL VALUES ± OVERALL -	APR BY:	DATE APR:	
	APR BY:	DATE APR:	

CONFIDENTIAL:
ALL DESIGN RIGHTS RESERVED
THE INFORMATION, DATA, DESIGN, AND DRAWINGS EMBODIED IN THIS DOCUMENT AND ALL REPRODUCTIONS THEREOF ARE THE EXCLUSIVE PROPERTY OF DIVERSIFIED WOODCRAFTS, INC.

THESE DOCUMENTS ARE SUPPLIED WITH THE UNDERSTANDING THAT THEY WILL NOT BE DISCLOSED TO THIRD PARTIES WITHOUT WRITTEN CONSENT OF DIVERSIFIED WOODCRAFTS, INC. ANY REPRODUCTION IN PART OR WHOLE WITHOUT WRITTEN CONSENT IS SUBJECT TO LEGAL ACTION.

TITLE:
PERIMETER WORKSTATION
ASSEMBLY INSTRUCTIONS

DRAWING NUMBER:	SCALE:	SHEET:	REVISION:
PERIMETER WORKSTATION	NTS	17 OF 18	REV A

TROUBLESHOOTING YOUR GFCI ELECTRICAL RECEPTACLE:

PLEASE NOTE: THROUGHOUT ANY OF THE FOLLOWING STEPS (PROCEDURES); IF YOU ARE NOT SURE YOU CAN DO THIS JOB SAFELY, AND COMPETENTLY, REFER THIS WORK TO QUALIFIED PROFESSIONAL!

If your unit comes equipped with a GFCI (Ground Fault Circuit Interrupter) electrical receptacle, and there is no power in the receptacle please consider/check the following:

- The extension cord (if being used) is working properly.
- The breaker hasn't been tripped, or turned off.

This type of GFCI has two testing-related buttons on it. One button is appropriately labeled "TEST", and the other button is labeled "RESET". To test the GFCI receptacle follow these steps:

- Plug in an appliance (lamp or night light) into the outlet. The light should now be on. Then press the "TEST" button on the GFCI. The GFCI "RESET" button should pop out, and the light should go out.
- If the "RESET" button pops out, but the light doesn't go out, the GFCI has been improperly wired. In this case please contact a certified professional. There may also be a problem with other wiring in the same circuit.
- If the "RESET" button doesn't pop out, the GFCI is defective, or malfunctioned, and should be replaced.
- If the GFCI is functioning properly, and the lamp goes out, press the "RESET" button to restore power to the outlet.

Conversely, if you have a GFI that has tripped (which is common) and it will not reset, you may have a wiring short in the circuit, a defective appliance on the circuit, or the GFI itself has become defective. To test a tripping GFCI follow these steps:

- Remove every appliance connected to the GFCI's circuit and reset it. If it doesn't reset there may either be a wiring fault behind a socket outlet, or your GFCI itself has become faulty.
- Make sure whatever you are plugging into to the GFCI is dry and not damaged.
- Only plug in one item at a time. If you are plugging in a defective item it will cause the GFCI to trip, and that item therefore should be replaced.

If you are still having difficulty the easiest way to troubleshoot a GFI is to obtain a GFI tester, which is available at most hardware stores. It plugs into the GFI outlet, and will supply you with a "snapshot" of your connections, indicating wiring problems and/or the condition of the GFI. Another way to troubleshoot is to simply purchase a new GFI and install it.